NOVELTY

EBM series of the spring applied safety brakes with modular system

EBM

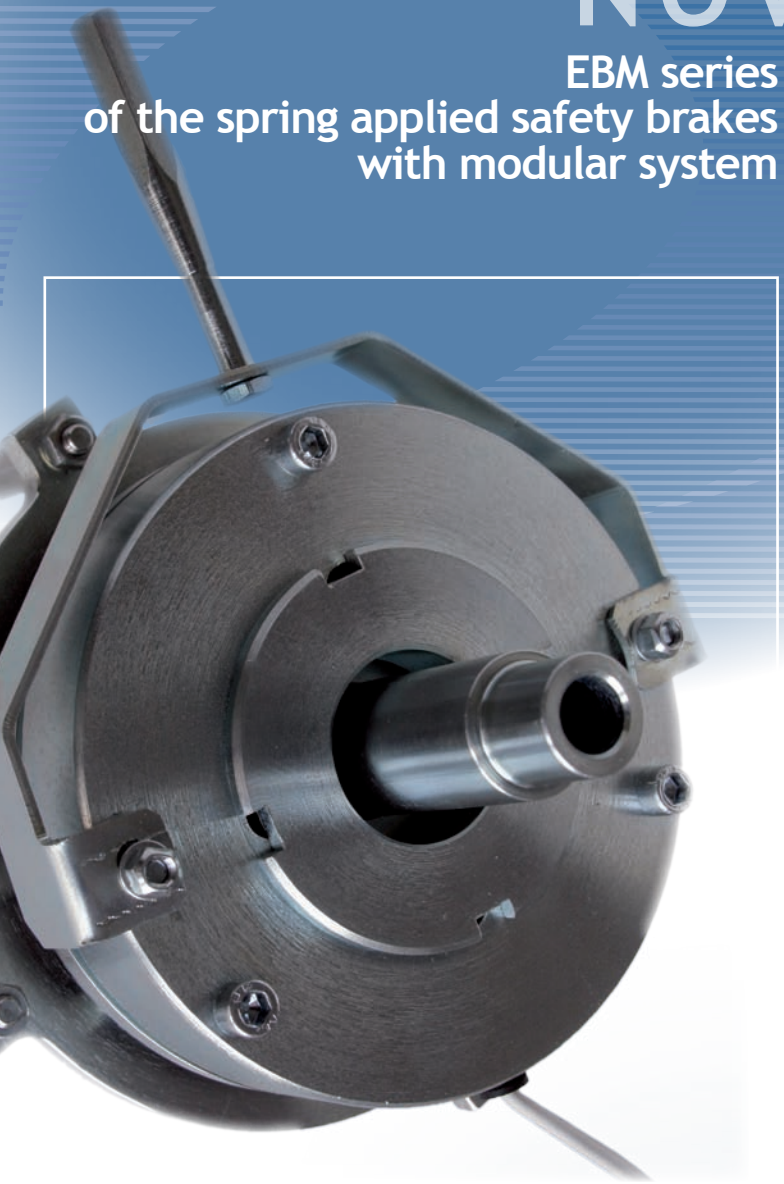

Company PSP Pohony a.s. was founded in year 1994 and it continues in centenary tradition of drive applications production in town Přerov. RW TÜV has implemented the certification of the quality controlling system of this company based on the ISO 9001 standards in the same year.

PSP Pohony a.s. manufactures and supplies helical, helical-bevel, worm and special gear units in design with electric motor or without it. Further production: couplings - flexible, claw, starting, overload release, disc, multiplate clutches and disc and multiplate brakes.

Type series of EBM spring applied safety electromagnetic brakes with modular system is offered in 8 sizes.

The brake is dimensionally comparable with any other types of disk brakes produced by leading manufacturers, and therefore it is easily interchangeable. Due to its compact construction, this dimensionally small product is able to transmit relatively high braking torque (up to 250 Nm). EBM brake consists of a minimum number of parts that are subject to ordinary wear and tear; it is easy to assemble and its air gap is easy to adjust.

For all sizes, it is possible to choose various versions of fixing plate in accordance to the type of electric motor, or on request, the customer can receive the braking torque adjusting nut (up to -10%) or a special lever for manual release of the brake.

The new conception of EBM brakes with modular system is based on modularity of individual components according to the brakes' position within the equipment or the way of their use.

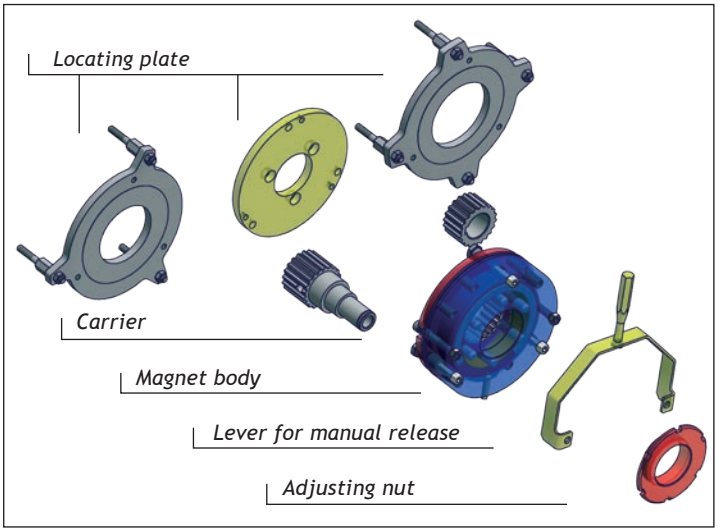

The EBM type series with modular system gives a possibility of choice to manufacturers of brake electric motors, or other electric equipment manufacturers who seek for a drive solution with safety brake.

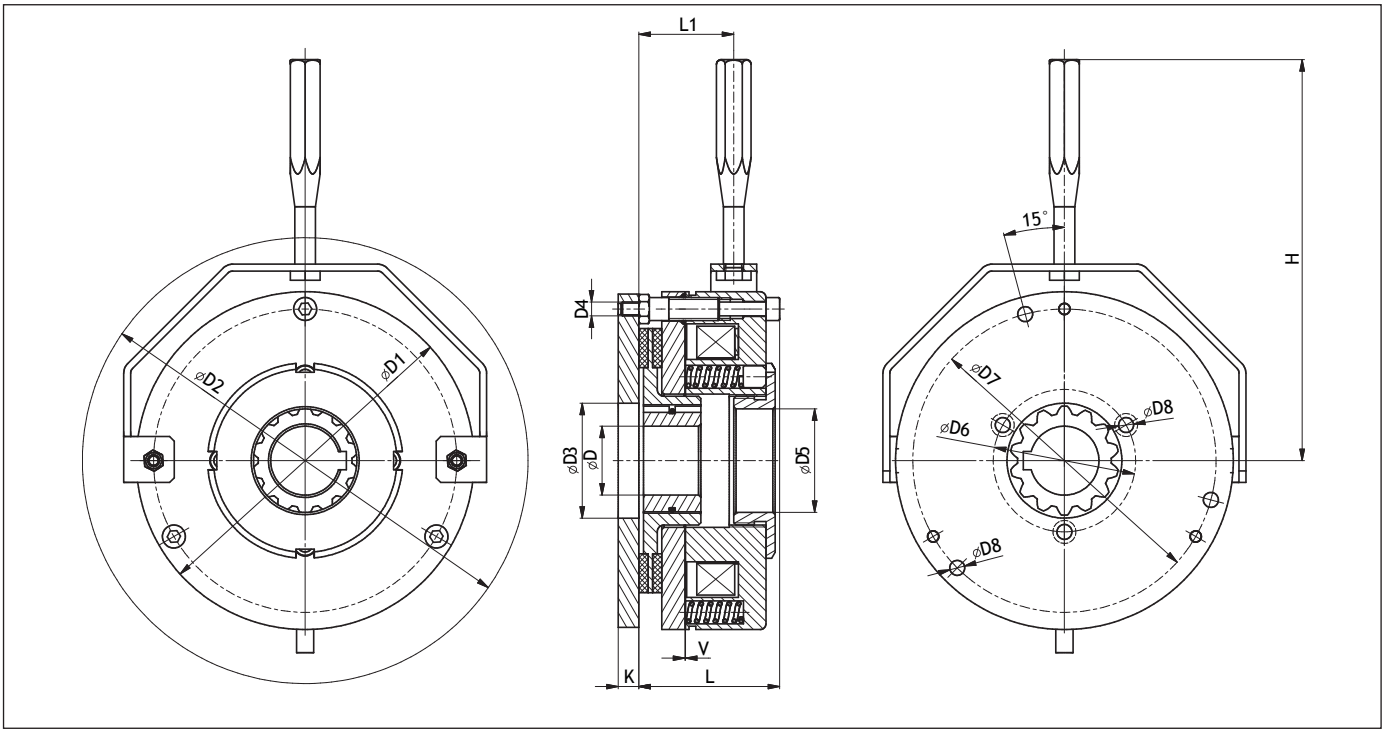

Type series of EBM spring applied safety electromagnetic brakes with modular system is offered in 8 sizes.

Parameters		EBM							
Designation	Units	0,5	1	2	4	6,3	10	16	25
Rating moment $M_{j.}$	Nm	5	10	20	40	63	100	160	250
Static moment $M_{st.}$	Nm	5,5	12	24	48	75	120	190	300
Nominal voltage U	V_{ss}	205, 24, 12 ...							
D_{MIN}	mm	9 H7	12 H7	16 H7	19 H7	22 H7	25 H7	30 H7	32 H7
D_{MAX}		14 H7	19 H7	24 H7	28 H7	32 H7	40 H7	45 H7	50 H7
D1		87	104	128	147	166	194	218	252
D2		132	154	172	194	240	280	-	320
D3		20	30	40	45	55	65	75	80
D4		M4	M5	M6	M6	M8	M8	M8	M10
D5		19 H8	24 H8	35 H8	45 H8	52 H8	52 H8	65 H8	70 H8
D6		30	45	56	62	74	84	100	120
D7		72	90	112	132	145	170	196	230
D8		3x4,5	3x5,5	3x6,5	3x6,5	3x9	3x9	3x9	6x11
H		119	136	147	175	189	243	-	283
K		6	7	9	9	11	11	11	11
L		38	46	53	62	75	84	97	108
L_1		24,7	30,2	34,2	41,3	49,3	58,1	-	73,7
V_{MIN}	mm	0,2	0,2	0,2	0,3	0,3	0,3	0,4	0,4
V_{MAX}	mm	0,4	0,5	0,5	0,6	0,7	0,8	0,8	1,0
Speed max	min^{-1}	3000	3000	3000	3000	3000	3000	1500	1500
Moment of intertia of rotating parts	kgm^2	$2,8x10^{-5}$	$8,6x10^{-5}$	$36,1x10^{-5}$	$81,7x10^{-5}$	$105x10^{-5}$	$274x10^{-5}$	$512x10^{-5}$	$1060x10^{-5}$

Note: Connecting dimensions of the brake (for assembly with a particular type and size of the electric motor) will be provided on request. The air gap is adjusted at V_{MIN} level. If the air gap size extends to V_{MAX} level, it is necessary to re-adjust it to V_{MIN}.